Parts Information:
Galvanized Steel Shed Green 1.51 x 1.51 x 2.0m
Model No: GSS1515G.V3

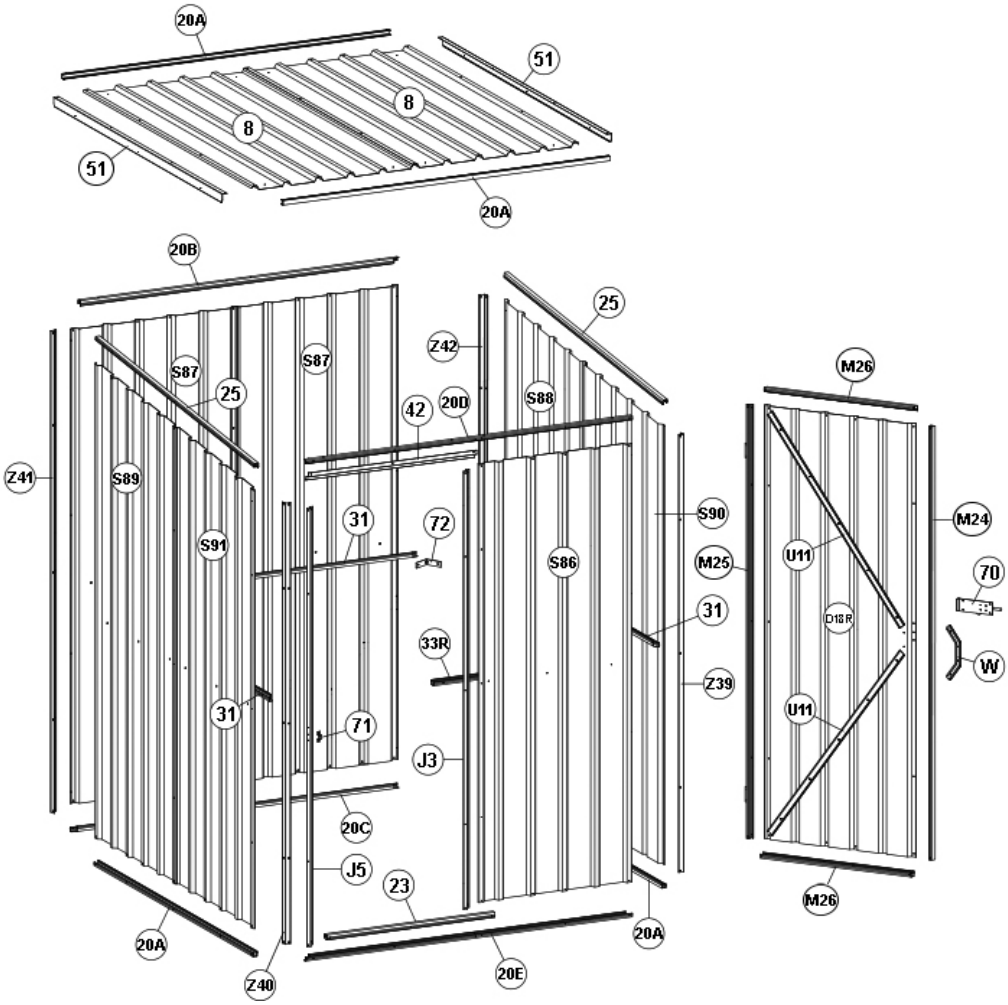

Item	Part No.	Description
8	GSSGV3.08	Roof
23	GSSGV3.23	Lower Support (Door)
25	GSSGV3.25	Upper Support (Side Panel)
31	GSSGV3.31	Middle Support (Rear Panel)
42	GSSGV3.42	Upper Support (Door)
51	GSSGV3.51	End Roof Support
70	GSSGV3.70	Bolt Lock
71	GSSGV3.71	Lock Brace
72	GSSGV3.72	Angle Brace
20A	GSSGV3.20A	Support For Roof/Side Panel
20B	GSSGV3.20B	Upper Support (Rear Panel)
20C	GSSGV3.20C	Lower Support (Rear Panel)
20D	GSSGV3.20D	Upper Support (Door/Front Panel)
20E	GSSGV3.20E	Lower Support (Door/Front Panel)
33R	GSSGV3.33R	Middle Support (Front Panel R/S)
D18R	GSSGV3.D18R	Door
J3	GSSGV3.J3	Door Support Beam (Right Side)

Item	Part No.	Description
J5	GSSGV3.J5	Door Support Beam (Left Side)
M24	GSSGV3.M24	Door Side Beam (R/S)
M25	GSSGV3.M25	Door Side Beam (L/S)
M26	GSSGV3.M26	Upper/Lower Support Beam (Door)
S86	GSSGV3.S86	Front Panel
S87	GSSGV3.S87	Rear Panel (Left Side)
S87	GSSGV3.S87	Rear Panel (Right Side)
S88	GSSGV3.S88	Side Panel (Right Side)
S89	GSSGV3.S89	Side Panel (Left Side)
S90	GSSGV3.S90	Side Panel (Right Side)
S91	GSSGV3.S91	Side Panel (Left Side)
U11	GSSGV3.U11	Door Brace
W	GSSGV3.W	Door Handle
Z39	GSSGV3.Z39	Upright Support Beam (Front Right Side)
Z40	GSSGV3.Z40	Upright Support Beam (Front Left Side)
Z41	GSSGV3.Z41	Upright Support Beam (Rear Left Side)
Z42	GSSGV3.Z42	Upright Support Beam (Rear Right Side)

NOTE: It is our policy to continually improve products and as such we reserve the right to alter data, specifications and component parts without prior notice. There may be alternative versions of this product, please contact us should you require this information.
IMPORTANT: No liability is accepted for incorrect use of product. Spare parts must be fitted by a competent person
WARRANTY: Guarantee is 12 months from purchase date, proof of which will be required for any claim.

Sealey Group, Kempson Way, Suffolk Business Park, Bury St Edmunds, Suffolk. IP32 7AR
01284 757500 | 01284 703534 | sales@sealey.co.uk | www.sealey.co.uk