SEALEY

THE TOOL COMPANY

PARTS INFORMATION

Inverter Generator 2000W 230V 4-Stroke Engine

Model No. G2000I.V2

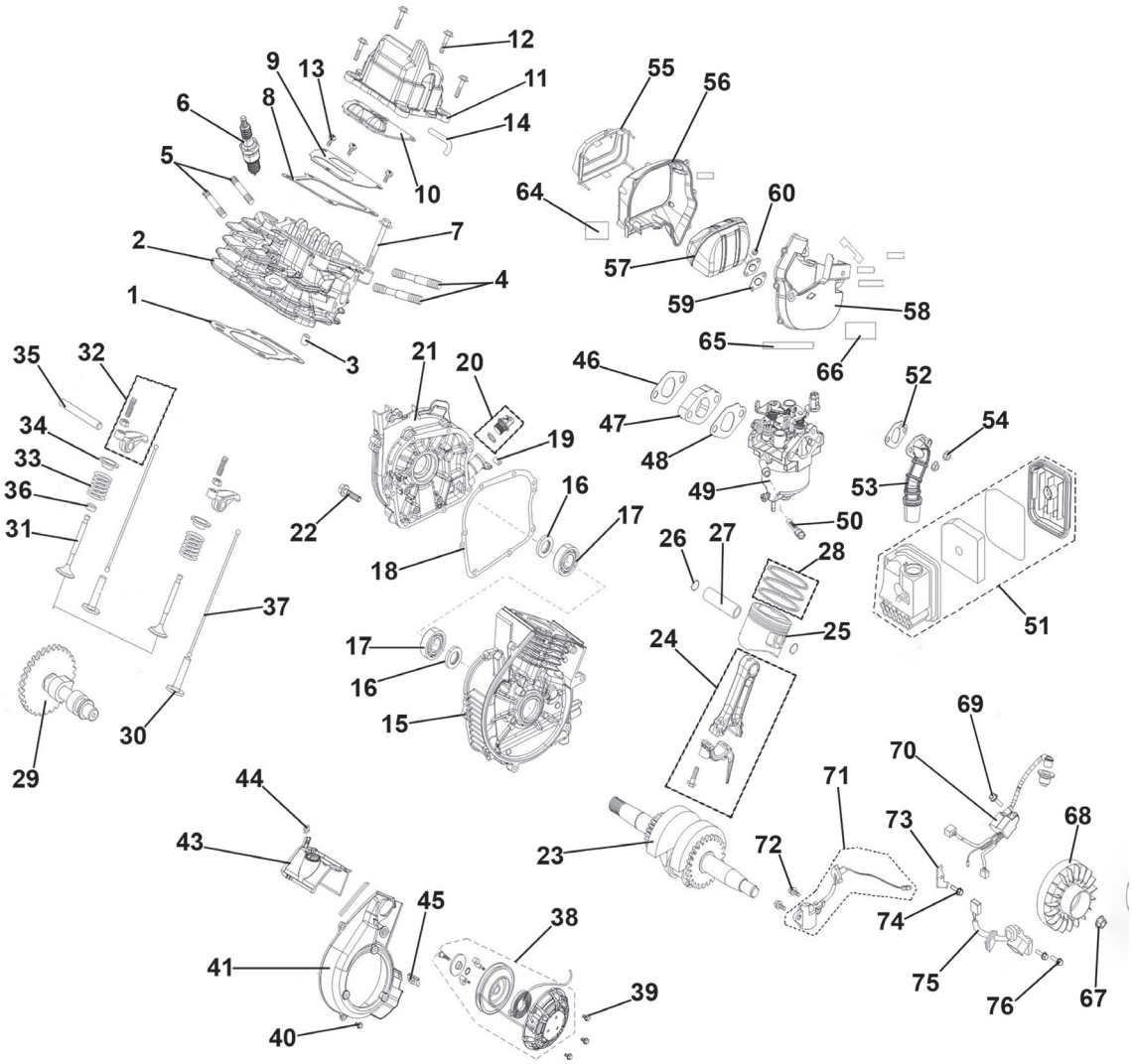

Item	Part No.	Description
1	G2000I.V2-01	Cylinder Head Gasket
2	G2000I.V2-02	Cylinder Head
3	G2000I.V2-03	Pin
4	G2000I.V2-04	Stud
5	G2000I.V2-05	Stud
6	G2000I.V2-06	Spark plug (A7TRC)
7	G2000I.V2-07	Cylinder Head Bolt
8	G2000I.V2-08	Cylinder Head Cover Gasket
9	G2000I.V2-09	Breath Plate

Item	Part No.	Description
10	G2000I.V2-10	Breath Groove Gasket
11	G2000I.V2-11	Cylinder Head Cover
12	G2000I.V2-12	Bolt
13	G2000I.V2-13	Bolt
14	G2000I.V2-14	Breather Tube
15	G2000I.V2-15	Crankcase
16	G2000I.V2-16	Oil Seal Ø19.4mm ID
17	G2000I.V2-17	Bearing
18	G2000I.V2-18	Crankcase Gasket

Note: It is our policy to continually improve products and as such we reserve the right to alter data, specifications and component parts without prior notice. See www.sealey.co.uk for the latest information.
Important: No liability is accepted for incorrect use of product. Spare parts must be fitted by a competent person.

Jack Sealey (EU) Ltd t/a Sealey Group Farney Street, Carrickmacross, Co. Monaghan, A81 PK68 Ireland
Jack Sealey Ltd t/a Sealey Group Kempson Way, Suffolk Business Park, Bury St Edmunds, Suffolk, IP32 7AR UK
Tel: 01284 757500 ▪ **Email:** sales@sealey.co.uk ▪ **Web:** www.sealey.co.uk

© Jack Sealey Limited

SEALEY

THE TOOL COMPANY

Inverter Generator 2000W 230V 4-Stroke Engine

Model No. G2000I.V2

Item	Part No.	Description
19	G2000I.V2-19	Pin
20	G2000I.V2-20	Oil Dipstick
21	G2000I.V2-21	Crankcase Cover
22	G2000I.V2-22	Bolt
23	G2000I.V2-23	Crankshaft Assembly
24	G2000I.V2-24	Connecting Rod
25	G2000I.V2-25	Piston
26	G2000I.V2-26	Piston Pin Clip
27	G2000I.V2-27	Piston Pin
28	G2000I.V2-28	Piston Ring Assembly
29	G2000I.V2-29	Camshaft Assembly
30	G2000I.V2-30	Valve Tappet
31	G2000I.V2-31	Valve
32	G2000I.V2-32	Valve Rocker
33	G2000I.V2-33	Spring
34	G2000I.V2-34	Valve Spring Seat
35	G2000I.V2-35	Valve Rocker Shaft
36	G2000I.V2-36	Seal Guard
37	G2000I.V2-37	Valve Lifter
38	G2000I.V2-38	Recoil Starter Assembly
39	G2000I.V2-39	Bolt
40	G2000I.V2-40	Bolt
41	G2000I.V2-41	Shroud Assembly
43	G2000I.V2-43	Cylinder Air Shield
44	G2000I.V2-44	Limit Card
45	G2000I.V2-45	Nut
46	G2000I.V2-46	Carberetor Gasket
47	G2000I.V2-47	Carberetor Insulator Plate

Item	Part No.	Description
48	G2000I.V2-48	Carberetor Insulator Gasket
49	G2000I.V2-49	Carberetor Assembly
50	G2000I.V2-50	Fuel Strainer
51	G2000I.V2-51	Air Filter
52	G2000I.V2-52	Air Filter Gasket
53	G2000I.V2-53	Air Filter Intake Duct
54	G2000I.V2-54	Nut
55	G2000I.V2-55	Muffler Side Cover
56	G2000I.V2-56	Muffler Shroud
57	G2000I.V2-57	Muffler Body
58	G2000I.V2-58	Muffler Shield
59	G2000I.V2-59	Exhaust Outlet Gasket
60	G2000I.V2-60	Nut
64	G2000I.V2-64	Protection Film A
65	G2000I.V2-65	Protection Film B
66	G2000I.V2-66	Protection Film C
67	G2000I.V2-67	Flywheel Nut
68	G2000I.V2-68	Flywheel Sub Assembly
69	G2000I.V2-69	Bolt
70	G2000I.V2-70	Ignitor
71	G2000I.V2-71	Oil Sensor
72	G2000I.V2-72	Bolt
73	G2000I.V2-73	Clamp
74	G2000I.V2-74	Bolt
75	G2000I.V2-75	Ignition Coil
76	G2000I.V2-76	Bolt
--	G2000I-V2-TK	Tool Kit (Not Shown)

Note: It is our policy to continually improve products and as such we reserve the right to alter data, specifications and component parts without prior notice. See www.sealey.co.uk for the latest information.
Important: No liability is accepted for incorrect use of product. Spare parts must be fitted by a competent person.

Jack Sealey (EU) Ltd t/a Sealey Group Farney Street, Carrickmacross, Co. Monaghan, A81 PK68 Ireland
Jack Sealey Ltd t/a Sealey Group Kempson Way, Suffolk Business Park, Bury St Edmunds, Suffolk, IP32 7AR UK
Tel: 01284 757500 ▪ **Email:** sales@sealey.co.uk ▪ **Web:** www.sealey.co.uk

© Jack Sealey Limited

Inverter Generator 2000W 230V 4-Stroke Engine

Model No. G2000I.V2

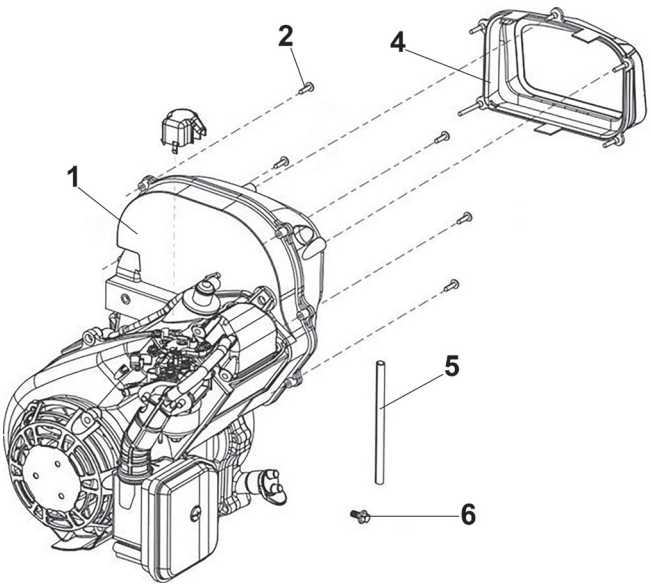

Item	Part No.	Description
1	G2000IV2.01-1	Engine
2	G2000IV2.01-2	Tapping Screw
4	G2000IV2.01-4	Muffler Cover
5	G2000IV2.01-5	Fuel Pipe
6	G2000IV2.01-6	Flange Bolt

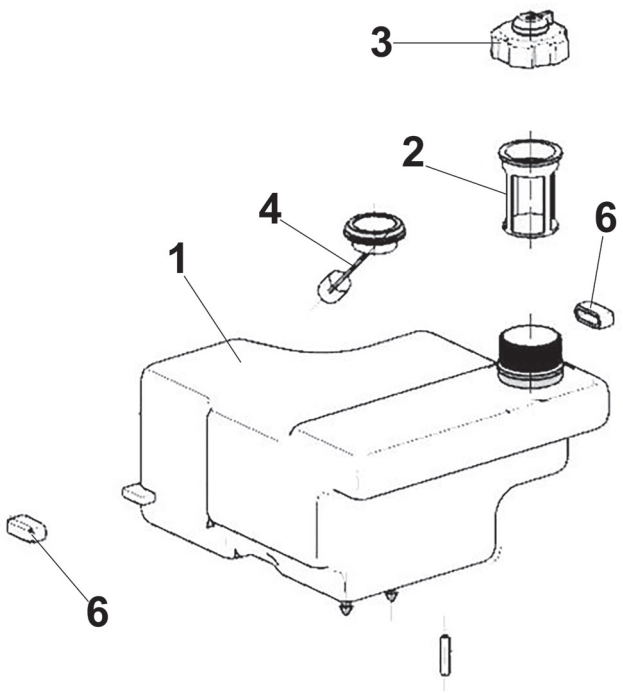

Item	Part No.	Description
1	G2000IV2.02-1	Fuel Tank Assembly
2	G2000IV2.02-2	Fuel Filter
3	G2000IV2.02-3	Fuel Cap
4	G2000IV2.02-4	Fuel Level Gauge
6	G2000IV2.02-6	Rubber Stop

Note: It is our policy to continually improve products and as such we reserve the right to alter data, specifications and component parts without prior notice. See www.sealey.co.uk for the latest information.
Important: No liability is accepted for incorrect use of product. Spare parts must be fitted by a competent person.

Jack Sealey (EU) Ltd t/a Sealey Group Farney Street, Carrickmacross, Co. Monaghan, A81 PK68 Ireland
Jack Sealey Ltd t/a Sealey Group Kempson Way, Suffolk Business Park, Bury St Edmunds, Suffolk, IP32 7AR UK
Tel: 01284 757500 ▪ **Email:** sales@sealey.co.uk ▪ **Web:** www.sealey.co.uk

© Jack Sealey Limited

Inverter Generator 2000W 230V 4-Stroke Engine

Model No. G2000I.V2

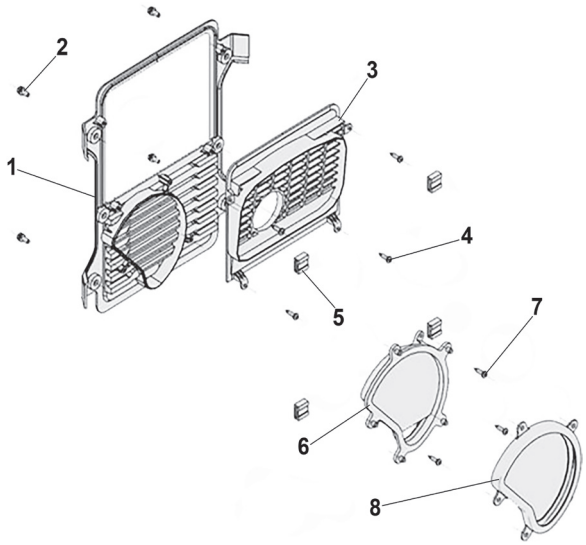

Item	Part No.	Description
1	G2000IV2.03-1	Muffler Cover Support
2	G2000IV2.03-2	Cross Pan Bolts
3	G2000IV2.03-3	Muffle Cover
4	G2000IV2.03-4	Tapping Screw
5	G2000IV2.03-5	Clip Nut
6	G2000IV2.03-6	Alternator Cover
7	G2000IV2.03-7	Tapping Screw
8	G2000IV2.03-8	Rubber Part

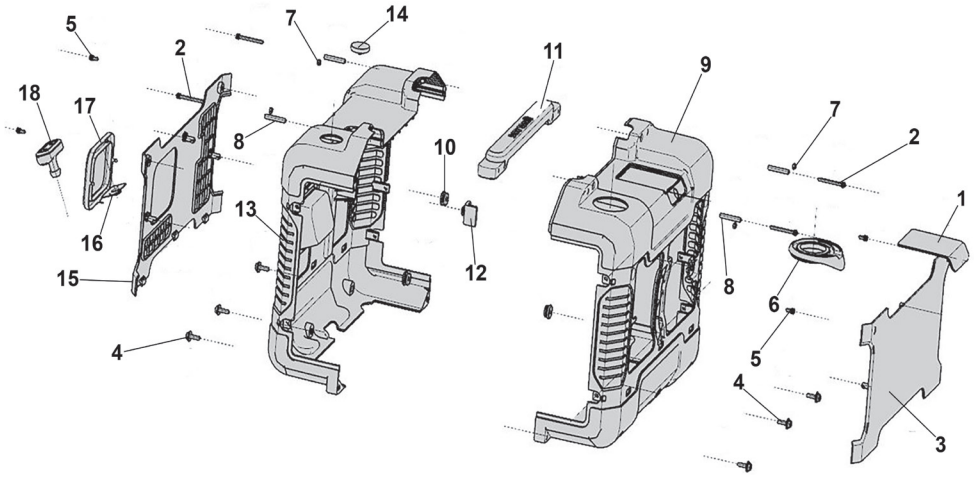

Item	Part No.	Description
1	G2000IV2.04-1	Spark Plug Cover
2	G2000IV2.04-2	Assembled Bolt
3	G2000IV2.04-3	Back Panel
4	G2000IV2.04-4	Flange Bolt M6 x 20mm
5	G2000IV2.04-5	Flange Bolt M6 x 10mm
6	G2000IV2.04-6	Rubber Part
7	G2000IV2.04-7	Nut M5
8	G2000IV2.04-8	Bushing
9	G2000IV2.04-9	Back Housing

Item	Part No.	Description
10	G2000IV2.0515	Rubber Stop
11	G2000IV2.0411	Handle
12	G2000IV2.0412	Rubber Stop
13	G2000IV2.0413	Front Housing
14	G2000IV2.0414	Viewing Glass
15	G2000IV2.0415	Front Board
16	G2000IV2.0416	Recoil Baffle
17	G2000IV2.0417	Frame
18	G2000IV2.0418	Recoil Handle

Note: It is our policy to continually improve products and as such we reserve the right to alter data, specifications and component parts without prior notice. See www.sealey.co.uk for the latest information.
Important: No liability is accepted for incorrect use of product. Spare parts must be fitted by a competent person.

Jack Sealey (EU) Ltd t/a Sealey Group Farney Street, Carrickmacross, Co. Monaghan, A81 PK68 Ireland
Jack Sealey Ltd t/a Sealey Group Kempson Way, Suffolk Business Park, Bury St Edmunds, Suffolk, IP32 7AR UK
Tel: 01284 757500 ▪ **Email:** sales@sealey.co.uk ▪ **Web:** www.sealey.co.uk

© Jack Sealey Limited

Inverter Generator 2000W 230V 4-Stroke Engine

Model No. G2000I.V2

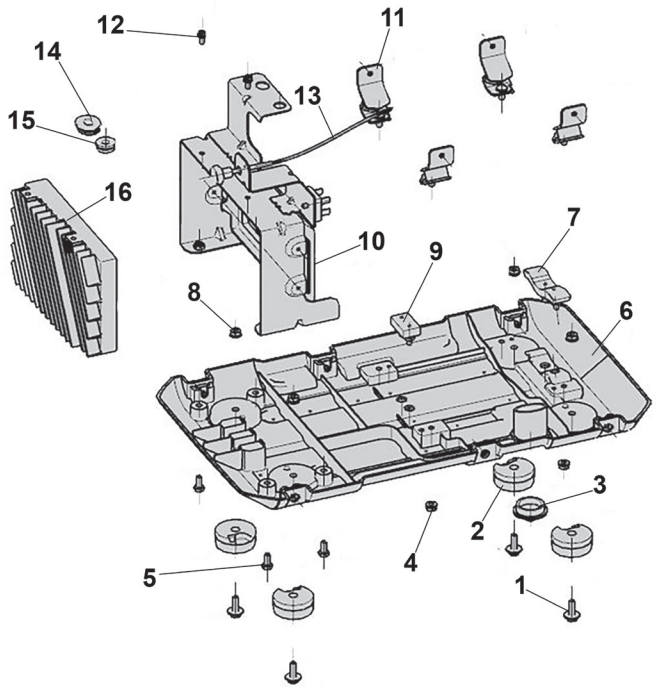

Item	Part No.	Description
1	G2000IV2.05-1	Screw M6 x 18mm
2	G2000IV2.05-2	Rubber Foot
3	G2000IV2.05-3	Rubber Protection
4	G2000IV2.05-4	Flange Nut M6
5	G2000IV2.05-5	Bolt M5 x 15mm
6	G2000IV2.05-6	Base
7	G2000IV2.05-7	Rubber Part
8	G2000IV2.05-8	Flange Nut M6
9	G2000IV2.05-9	Rubber Part
10	G2000IV2.0510	Bottom Support
11	G2000IV2.0511	Shock Absorber Foot
12	G2000IV2.0512	Screw M6 x 18mm
13	G2000IV2.0513	Throttle Cable
14	G2000IV2.0514	Rubber Stop
15	G2000IV2.0515	Rubber Stop
16	G2000IV2.0516	Inverter Unit

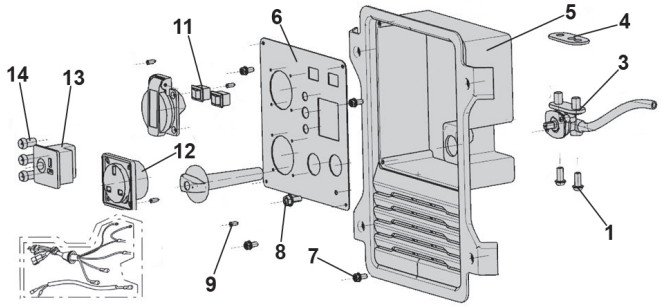

Item	Part No.	Description
1	G2000IV2.06-1	Cross Bolt
3	G2000IV2.06-3	Fuel Cut Out/In Switch Valve
4	G2000IV2.06-4	Fuel Switch Knob
5	G2000IV2.06-5	Panel Housing
6	G2000IV2.06-6	Control Panel
7	G2000IV2.06-7	Cross Screw
8	G2000IV2.06-8	Cross Screw
9	G2000IV2.06-9	Tapping Screw
11	G2000IV2.0611	Switch, Rocker (Black) 6A/250V
12	G2000IV2.0612	Socket (3-Pin)
13	G2000IV2.0613	DC Socket Charger Input
14	G2000IV2.0614	Pilot Light

Note: It is our policy to continually improve products and as such we reserve the right to alter data, specifications and component parts without prior notice. See www.sealey.co.uk for the latest information.
Important: No liability is accepted for incorrect use of product. Spare parts must be fitted by a competent person.

Jack Sealey (EU) Ltd t/a Sealey Group Farney Street, Carrickmacross, Co. Monaghan, A81 PK68 Ireland
Jack Sealey Ltd t/a Sealey Group Kempson Way, Suffolk Business Park, Bury St Edmunds, Suffolk, IP32 7AR UK
Tel: 01284 757500 ▪ **Email:** sales@sealey.co.uk ▪ **Web:** www.sealey.co.uk

© Jack Sealey Limited

Inverter Generator 2000W 230V 4-Stroke Engine

Model No. G2000I.V2

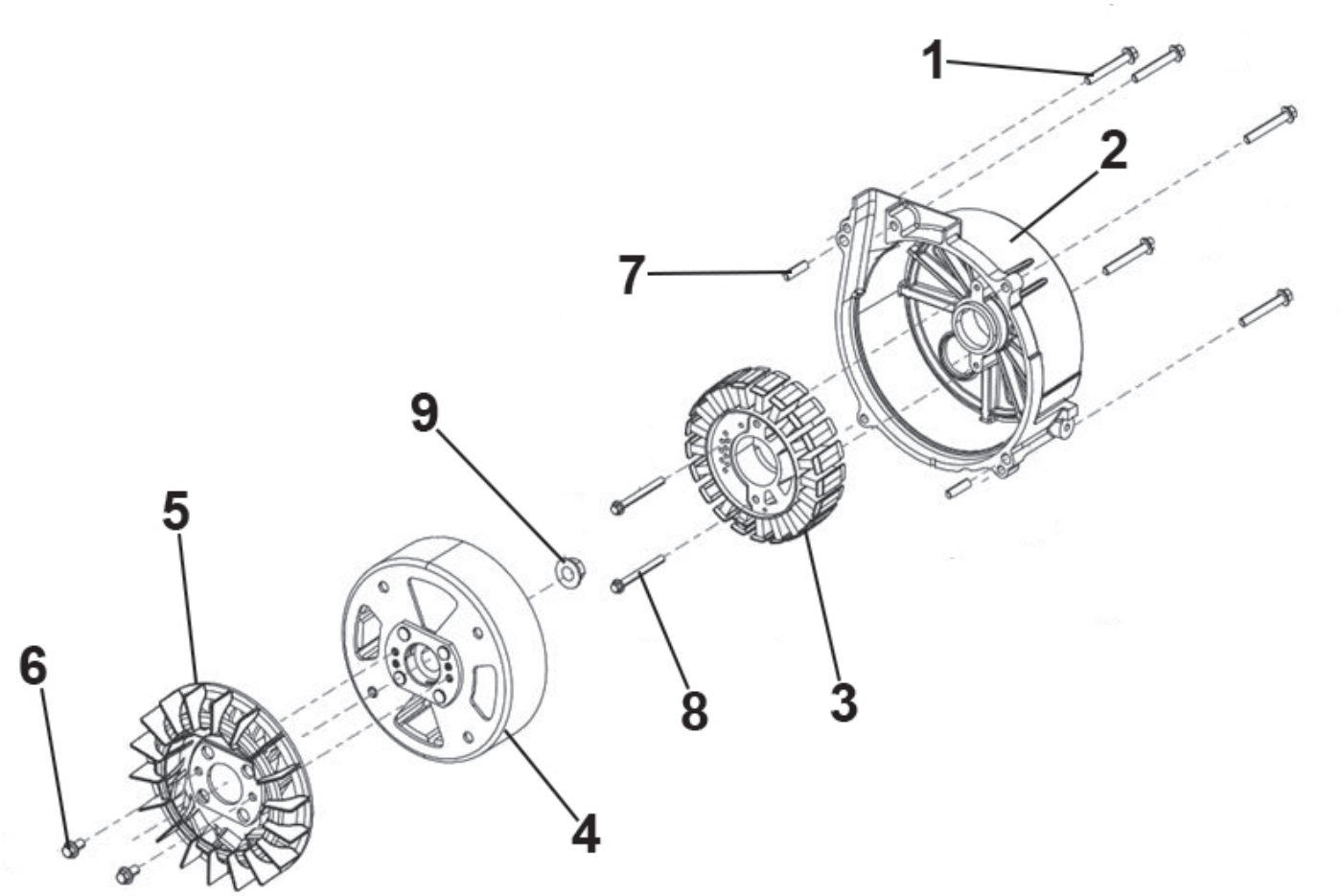

Item	Part No.	Description
1	G2000IV2.07-1	Flange Bolt
2	G2000IV2.07-2	Alternator Cover
3	G2000IV2.07-3	Stator Assembly
4	G2000IV2.07-4	Rotator Assembly
5	G2000IV2.07-5	Engine Impeller

Item	Part No.	Description
6	G2000IV2.07-6	Flange Bolt
7	G2000IV2.07-7	Pin
8	G2000IV2.07-8	Flange Bolt
9	G2000IV2.07-9	Flange Nut

Note: It is our policy to continually improve products and as such we reserve the right to alter data, specifications and component parts without prior notice. See www.sealey.co.uk for the latest information.
Important: No liability is accepted for incorrect use of product. Spare parts must be fitted by a competent person.

Jack Sealey (EU) Ltd t/a Sealey Group Farney Street, Carrickmacross, Co. Monaghan, A81 PK68 Ireland
Jack Sealey Ltd t/a Sealey Group Kempson Way, Suffolk Business Park, Bury St Edmunds, Suffolk, IP32 7AR UK
Tel: 01284 757500 ▪ **Email:** sales@sealey.co.uk ▪ **Web:** www.sealey.co.uk

© Jack Sealey Limited