SEALEY

THE TOOL COMPANY

PARTS INFORMATION

Folding 360° Rotating Engine Stand with Geared Handle Drive 900kg Capacity

Model No. ES900D

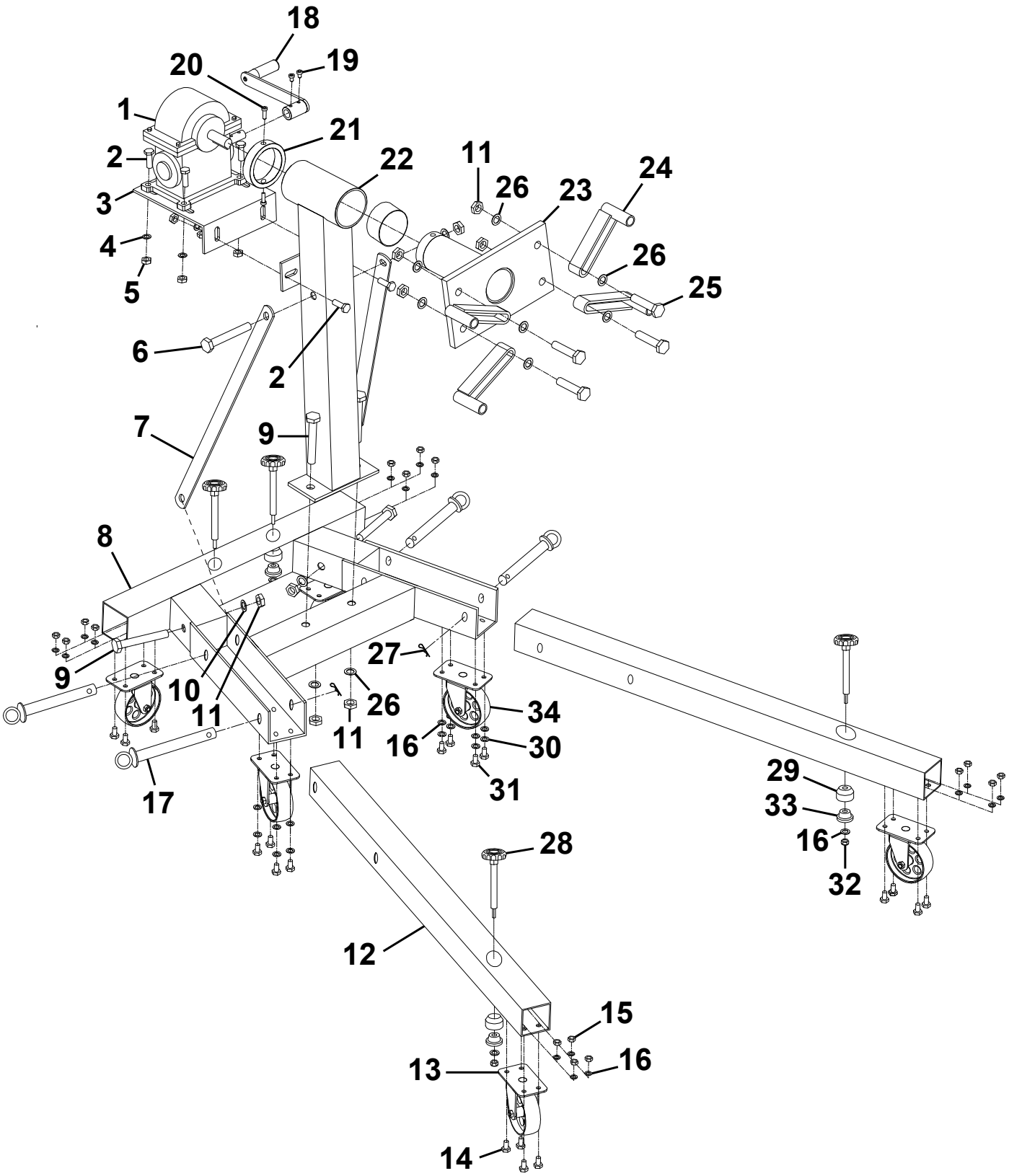

© Jack Sealey Limited

SEALEY

THE TOOL COMPANY

PARTS INFORMATION

Folding 360º Rotating Engine Stand with Geared Handle Drive 900kg Capacity

Model No. ES900D

Item	Part No.	Description	Qty
1	ES900D-01	Worm Gear Steering Unit	1
2	ES680D-V2-02	Hex Head Bolt M10x30mm	6
3	ES900D-03	Mounting Base	1
4	FWM10.S	Flat Washer M10 Zinc	6
5	SN10.S	Steel Nut M10 Zinc	6
6	HHB14100.S	Hex Head Bolt M14 x 100mm	1
7	ES900D-07	Support Brace	2
8	ES900D-08	Base Assembly	1
9	HHB1490.S	Hex Head Bolt M14 x 90mm	4
10	FWM14.S	Flat Washer M14 Zinc	5
11	SN14.S	Steel Nut M14 Zinc	9
12	ES900D-12	Leg	2
13	ES900D-13	3.5" Wheel, Swivel Castor, 4-Bolt	4
14	SS816.S	Hex Head Set Screw M8 X 16 Zinc	16
15	SN8.S	Steel Nut M8 Zinc	16
16	FWM8.S	Flat Washer M8 Zinc	28
17	ES900D-17	Leg Pin	4
18	ES900D-18	Adjustable Crank Handle	1
19	GSM68.S	Grub Screw M6x8 (single)	2

Item	Part No.	Description	Qty
20	GSM1020.S	Grub Screw M10x20 Black	2
21	ES900D-21	Swivel Head Limit Sleeve/ Spacer	1
22	ES900D-22	Main Post	1
23	ES900D-23	Steering Head Mounting Plate	1
24	ES900D-24	Steering Head Mounting Arm	4
25	HHB1480.S	Hex Head Bolt M14 x 80mm	4
26	FWM14.S	Flat Washer M14 Zinc	8
27	ES900D-27	R-Clip	4
28	ES900D-28	Handwheel Assembly	4
29	ES900D-29	Swivel Head for Handwheel	4
30	SWM8.S	Spring Washer M8 Zinc	8
31	SS812.S	Hex Head Set Screw M8 X 12 Zinc	8
32	SN8.S	Steel Nut M8 Zinc	4
33	ES900D-33	Rubber Pad for Swivel Head	4
34	ES900D-34	3" Wheel, Swivel Castor, 4-Bolt	2

Note: It is our policy to continually improve products and as such we reserve the right to alter data, specifications and component parts without prior notice. See www.sealey.co.uk for the latest information.
Important: No liability is accepted for incorrect use of product. Spare parts must be fitted by a competent person.

Jack Sealey (EU) Ltd t/a Sealey Group Farney Street, Carrickmacross, Co. Monaghan, A81 PK68 Ireland
Jack Sealey Ltd t/a Sealey Group Kempson Way, Suffolk Business Park, Bury St Edmunds, Suffolk, IP32 7AR UK
Tel: 01284 757500 ▪ **Email:** sales@sealey.co.uk ▪ **Web:** www.sealey.co.uk

© Jack Sealey Limited