Parts Information:
Vice 300mm All Steel
Model No: ASV300

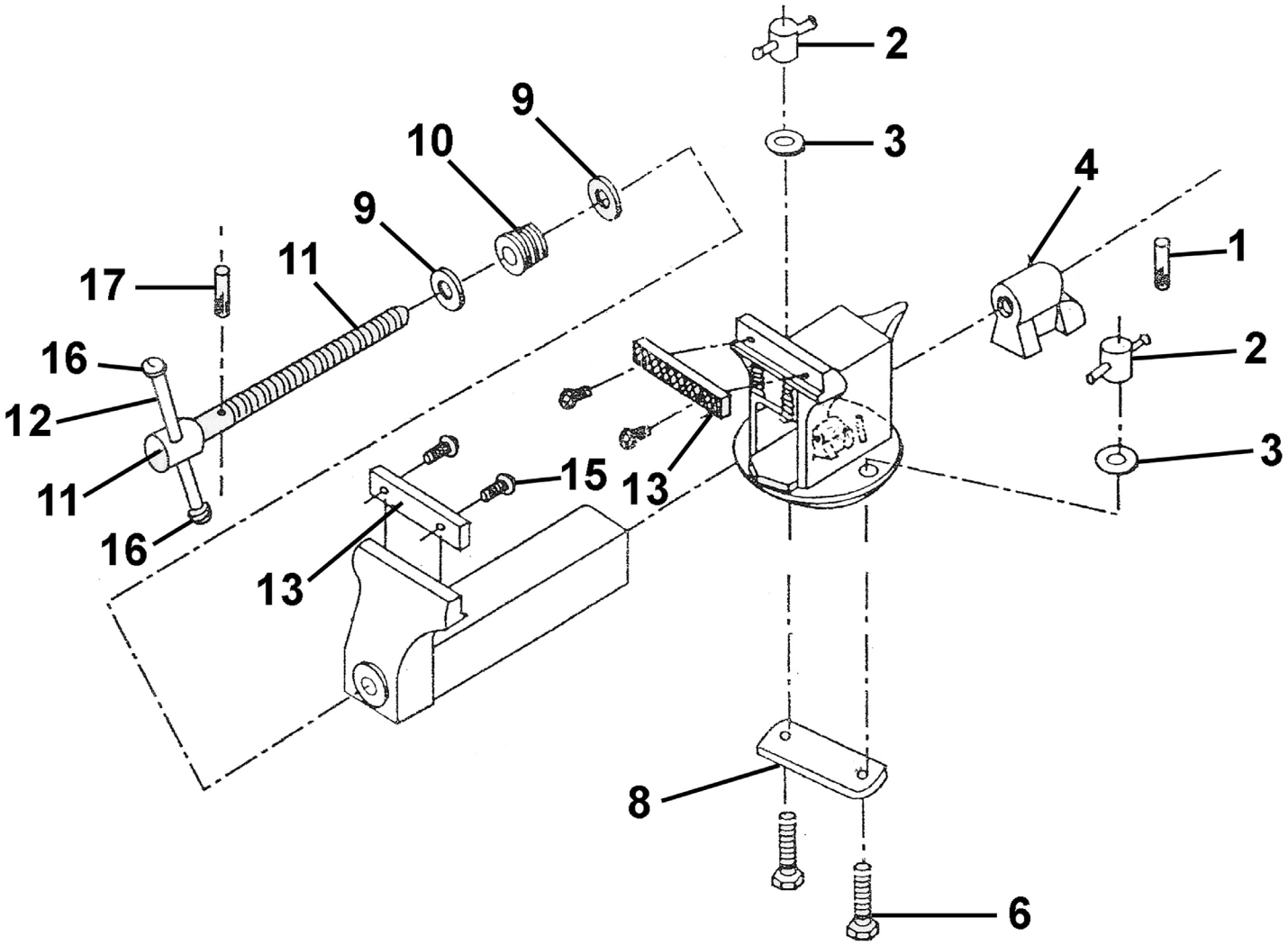

Item	Part No.	Description
1	ASV300.01	Leadscrew Nut Locking Pin
2	ASV300.02	Locking Nut
3	ASV300.03	Washer
4	ASV300.04	Leadscrew Nut
6	ASV300.06	Locking Bolt
8	ASV300.08	Base Plate
9	ASV300.09	Leadscrew Washer
10	ASV300.10	Leadscrew Bushing

Item	Part No.	Description
11	ASV300.11	Leadscrew
12	ASV300.12	Handle (c/w Rubber Bushing)
13	ASV300.13	Jaw Face
15	ASV300.15	Jaw Face Set Screw
16	ASV300.16	Rubber Ring
17	ASV300.17	Leadscrew Nut Locking Pin
--	ASV300.07	Swivel Base (Not Shown)

NOTE: It is our policy to continually improve products and as such we reserve the right to alter data, specifications and component parts without prior notice. There may be alternative versions of this product, please contact us should you require this information.
IMPORTANT: No liability is accepted for incorrect use of product. Spare parts must be fitted by a competent person
WARRANTY: Guarantee is 12 months from purchase date, proof of which will be required for any claim.

Sealey Group, Kempson Way, Suffolk Business Park, Bury St Edmunds, Suffolk. IP32 7AR
01284 757500 | sales@sealey.co.uk | www.sealey.co.uk