INSTRUCTIONS FOR:

TRIPOD QUARTZ HALOGEN SPOTLIGHT 12V

Model No: **ML100.V2**

Thank you for purchasing a Sealey product. Manufactured to a high standard this product will, if used according to these instructions and properly maintained, give you years of trouble free performance.

IMPORTANT: **PLEASE READ THESE INSTRUCTIONS CAREFULLY. NOTE THE SAFE OPERATIONAL REQUIREMENTS, WARNINGS & CAUTIONS. USE THE PRODUCT CORRECTLY AND WITH CARE FOR THE PURPOSE FOR WHICH IT IS INTENDED. FAILURE TO DO SO MAY CAUSE DAMAGE AND/OR PERSONAL INJURY AND WILL INVALIDATE THE WARRANTY. PLEASE KEEP INSTRUCTIONS SAFE FOR FUTURE USE.**

1. SAFETY INSTRUCTIONS

DANGER! If using the lamp whilst the vehicle's engine is running, ensure that there is adequate ventilation to the vehicle. **Breathing exhaust fumes can be fatal.**

❒ **WARNING! DO NOT** look directly into the light.
✓ Ensure the unit is unplugged from the vehicle's cigarette lighter socket, before cleaning or maintaining the light.
✓ Keep the lens clean. **DO NOT** use abrasives, and do not touch the lens whilst in use, as it will be hot.
✓ Ensure the surface that the light is positioned on, is sound and stable. Ensure that the tripod is fully opened.
✗ **DO NOT** allow the light to get wet, or use it in wet or damp locations.
✗ **DO NOT** place the lamp face down on a surface while it is in use.
✗ **DO NOT** use the light if it or the cigarette lighter plug or wires are damaged.
✓ When you have finished using the unit, unplug it from the vehicle's cigarette lighter socket, and store it in a safe, dry, childproof location.

2. DESCRIPTION

Tough composite body with oversized reflector and quartz halogen bulb. Produces 1.5-million candle power from 12Volt supply using a cigarette lighter plug on 3mtr cable. Use four ways: hand-held, high level tripod, low level tripod or ground spike.

Reflector Ø: . . . . . **168 mm**
Overall Height (with grip + tripod): . . . . . **500 mm**
Output: . . . . . **1.5 million candle power**
Bulb: **H1 12V 100W**

3. ASSEMBLY AND USE

3.1. ASSEMBLY

3.1.1. **Grip.**
. With grip assembled as supplied, ensuring the latch (fig.3.2) is up, slide the shoe (fig.1.A) onto the foot of the lamp unit (fig.3.1) from the front, towards the back. and then push the latch down to lock the shoe into place,

3.1.2. **Grip with tripod.**
Fit grip as above and then unscrew lower collar (fig.1.E). Remove tripod (fig.1.D) from inside grip (fig.1.C), reverse it and pass the tripod legs through collar E as shown in fig.2. Screw collar E back onto grip C and open tripod legs.

3.1.3. **Grip with ground spike.**
Fit the ground spike to the grip C with collar E as for the tripod (the tripod must be removed from inside the grip before the spike can be fitted).

3.1.4. **Tripod without grip**
Unscrew collar B from the shoe A. Attach the tripod to the shoe using collar E (as in 3.1.2.)

3.2. USE
Plug the light into the vehicle's cigarette lighter socket (12 volt only) and switch it on.
For prolonged use, start the vehicle's engine and keep it running to prevent battery discharge, but see Section 1 Safety Instructions.

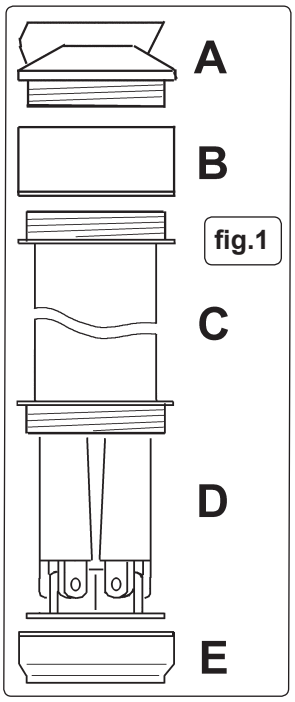

fig.1

4. BULB REPLACEMENT

Note: Sealey replacement bulb Part No: **ML100/B**
4.1. Turn off the lamp and disconnect it from the lighter socket. Allow the lamp to cool down.
4.2. Place lamp face down on a flat surface and remove the four screws (fig.5) from the reflector case.
4.3. Lift the reflector case from the bezel and remove the white wire from the bulb terminal and the black wire from the bulb mounting plate.
4.4. Unclip and remove bulb retaining spring and lift bulb out (fig.4). Fit new bulb and refit retaining spring.
4.5. Reconnect black and white wires, fit reflector case over the bezel and retain with the four screws.

Note: Parts support is available for this product. To obtain a parts listing and/or diagram, please log on to www.sealey.co.uk, email sales@sealey.co.uk or phone 01284 757500.

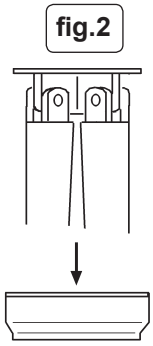
fig.2

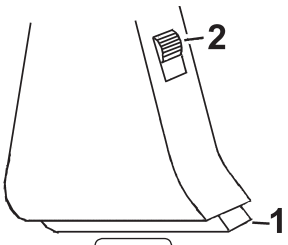

fig.3

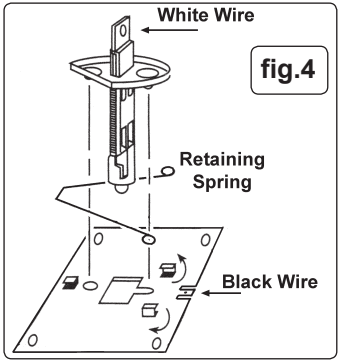

fig.4

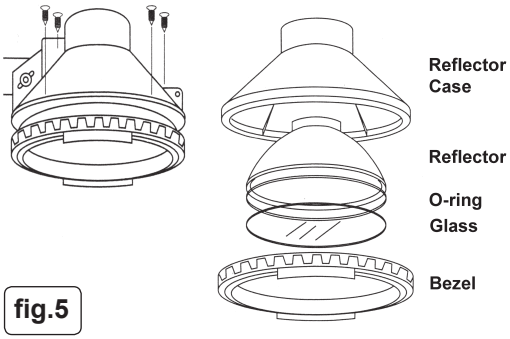

fig.5

NOTE: *It is our policy to continually improve products and as such we reserve the right to alter data, specifications and component parts without prior notice.*
IMPORTANT: No liability is accepted for incorrect use of this product.
WARRANTY: Guarantee is 12 months from purchase date, proof of which will be required for any claim.
INFORMATION: For a copy of our latest catalogue and promotions call us on 01284 757525 and leave your full name and address, including postcode.

Sole UK Distributor, Sealey Group,
Kempson Way, Suffolk Business Park,
Bury St. Edmunds, Suffolk,
IP32 7AR

01284 757500 www.sealey.co.uk
01284 703534 sales@sealey.co.uk

Original Language Version