SUPERLINE PRO® 11 DRAWER MOBILE WORKSTATION

MODEL NO: **APMWS4**

Thank you for purchasing a Sealey product. Manufactured to a high standard, this product will, if used according to these instructions, and properly maintained, give you years of trouble free performance.

IMPORTANT: PLEASE READ THESE INSTRUCTIONS CAREFULLY. NOTE THE SAFE OPERATIONAL REQUIREMENTS, WARNINGS & CAUTIONS. USE THE PRODUCT CORRECTLY AND WITH CARE FOR THE PURPOSE FOR WHICH IT IS INTENDED. FAILURE TO DO SO MAY CAUSE DAMAGE AND/OR PERSONAL INJURY AND WILL INVALIDATE THE WARRANTY. KEEP THESE INSTRUCTIONS SAFE FOR FUTURE USE.

Refer to instructions

Wear protective gloves

Wear safety footwear

1. SAFETY

- ❑ **WARNING!** Ensure Health & Safety, local authority, and general workshop practice regulations are adhered to when using these cabinets.
- ✓ Locate the cabinets in a suitable area.
- ✓ Keep the work area clean, uncluttered and ensure there is adequate lighting.
- ❑ **WARNING!** Use the cabinets on level and solid ground, preferably concrete.
- ✓ Keep the cabinets clean and tidy in accordance with good workshop practice.
- ✓ Keep children and unauthorised persons away from the work area.
- × **DO NOT** use these cabinets for any purpose other than that for which they are designed.
- × **DO NOT** use the cabinets outdoors.
- × **DO NOT** place the cabinets in a damp or wet location or an area where there is condensation.
- × **DO NOT** clean the units with any solvents which may damage the surfaces or the protective coating.

2. INTRODUCTION

Heavy-duty steel construction and manufactured with steel inner walls for extra strength and durability. Features eleven drawers with ball-bearing slides and liners, four cupboards and a pegboard back panel. Fitted with four Ø125mm PP castors, two fixed and two swivel with brakes for easy manoeuvrability. Supplied with a 25mm thick rubber wood worktop providing a strong working surface. Rust and solvent resistant powder coated finish. Cylinder locks and each supplied with two keys.

3. SPECIFICATION

Model No:	**APMWS4**
Nett Weight:	170.2kg
Overall Size (W x D x H):	With handle; 1890 x 460 x 1975mm, without handle; 1830 x 460 x 1975mm
Full length drawer (x1):	1110 x 418 x 68mm
Small drawer (x3):	528 x 418 x 48mm
Medium drawer (x2):	540 x 418 x 68mm
Large drawer (x3):	528 x 418 x 98mm
Extra Large drawer (x2):	540 x 418 x 153mm

4. CONTENTS

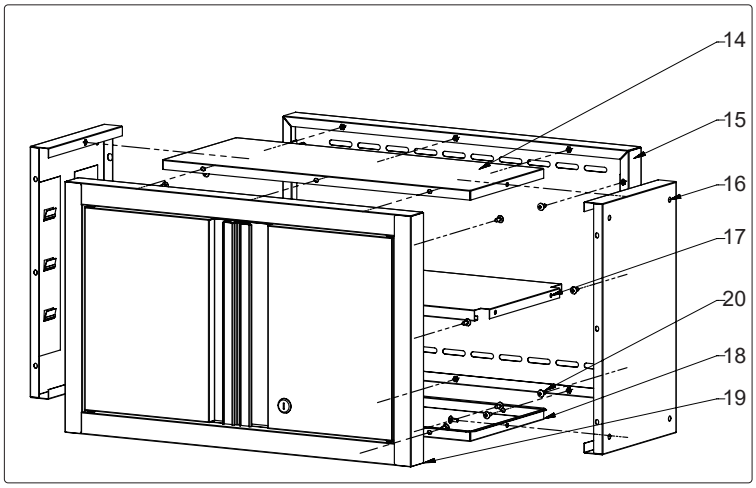

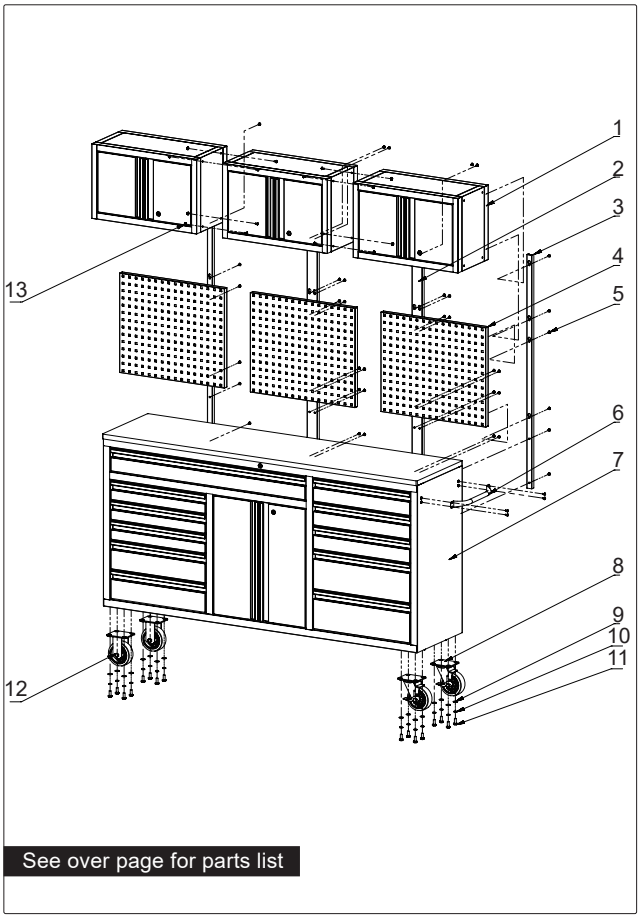

See over page for parts list

© Jack Sealey Limited

NO.	PARTS	QTY
1	Knock down wall cabinet	3
2	Post A	2
3	Post B	2
4	Pegboard	2
5	M6X12 bolts	40
6	Handle	1
7	Cabinet body	1
8	5”x2”Caster with brake	2
9	Washer	16
10	Spring washer	16

NO.	PARTS	QTY
11	M10x25 hex bolt	16
12	5”x2”Castor	2
13	M6 flange nut	12
14	Top panel	3
15	Back panel	3
16	Side panel	6
17	Shelf	3
18	Bottom panel	3
19	Front assembly	3
20	M5x12 bolts	84

5. ASSEMBLY

Refer to the contents list during assembly.

5.1. INSTALLING THE CASTORS (fig.1)

1. Lock all drawers of the rolling cabinet securely.
2. Turn the cabinet upside down, using the packaging material to protect the finish.
3. Attach the two swivel castors with brakes to the front of the cabinet using four M10×25 mm bolts for each castor.
4. Attach the two fixed castors to the other side of the cabinet using four M10×25 mm bolts for each castor.
5. Tighten all bolts securely with a wrench.
6. Return the cabinet to its upright position.

5.2. WALL CABINET ASSEMBLY (fig.2)

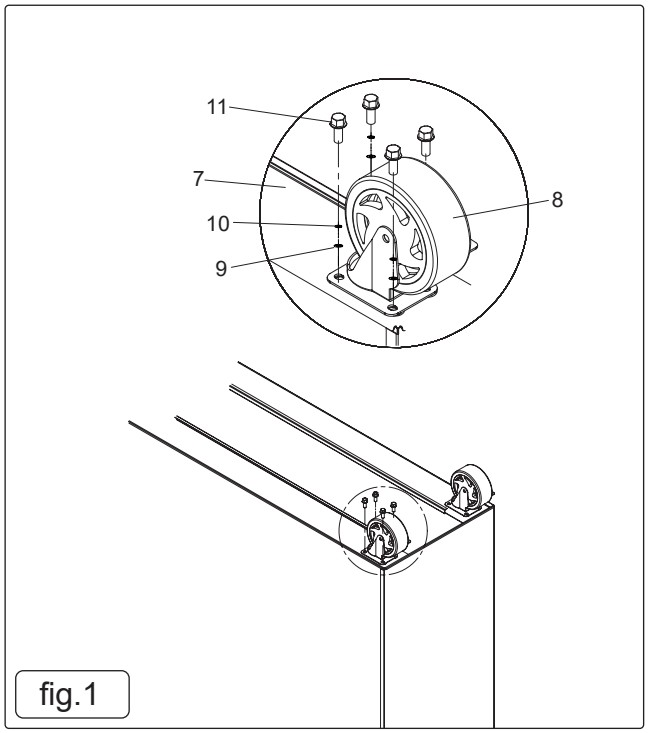

fig.1

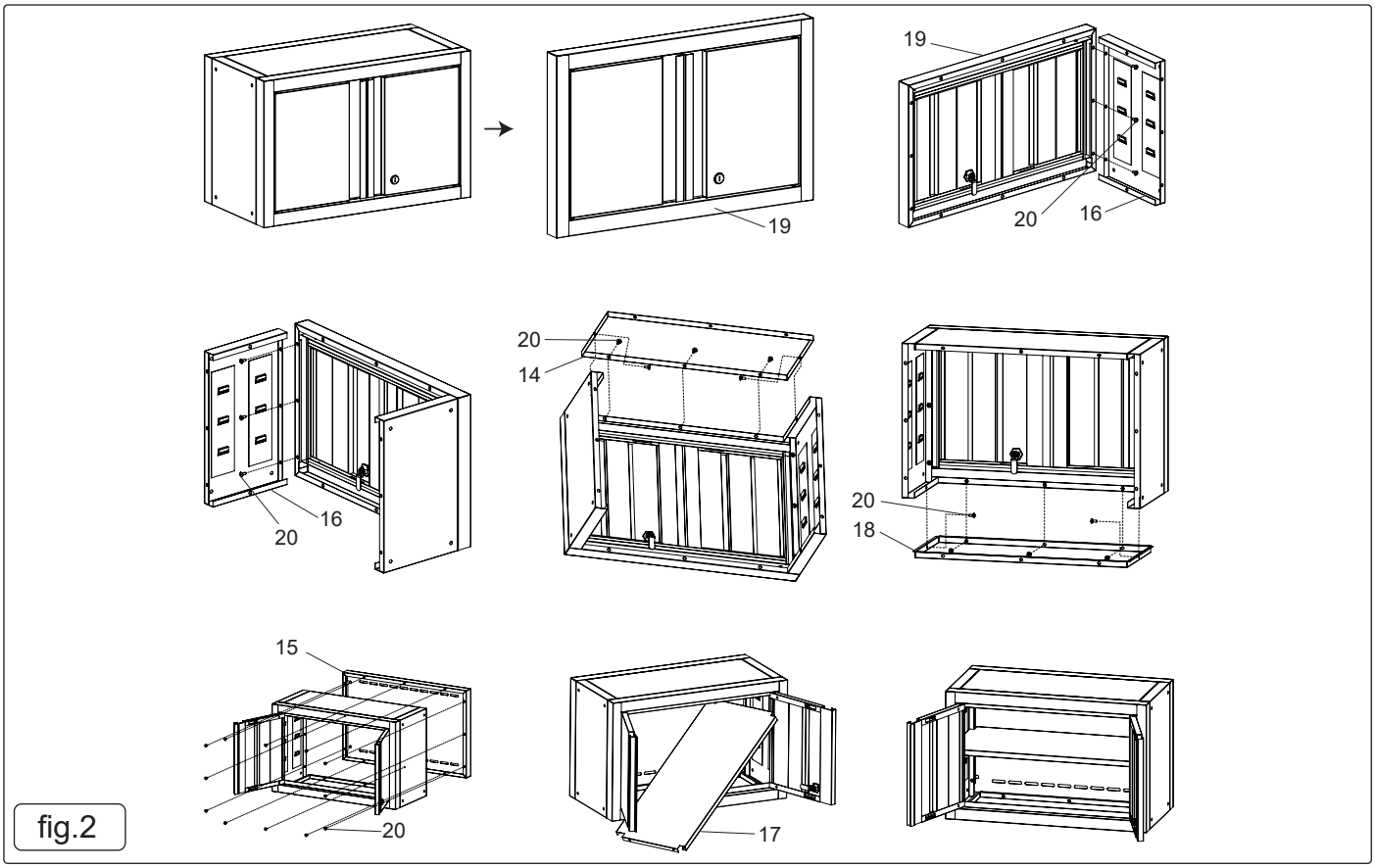

fig.2

5.3. Attach the handle (6) and posts (A, B) to the side of the cabinet using M6×12 bolts (5). Then attach the wall cabinets to the posts. Fig.3

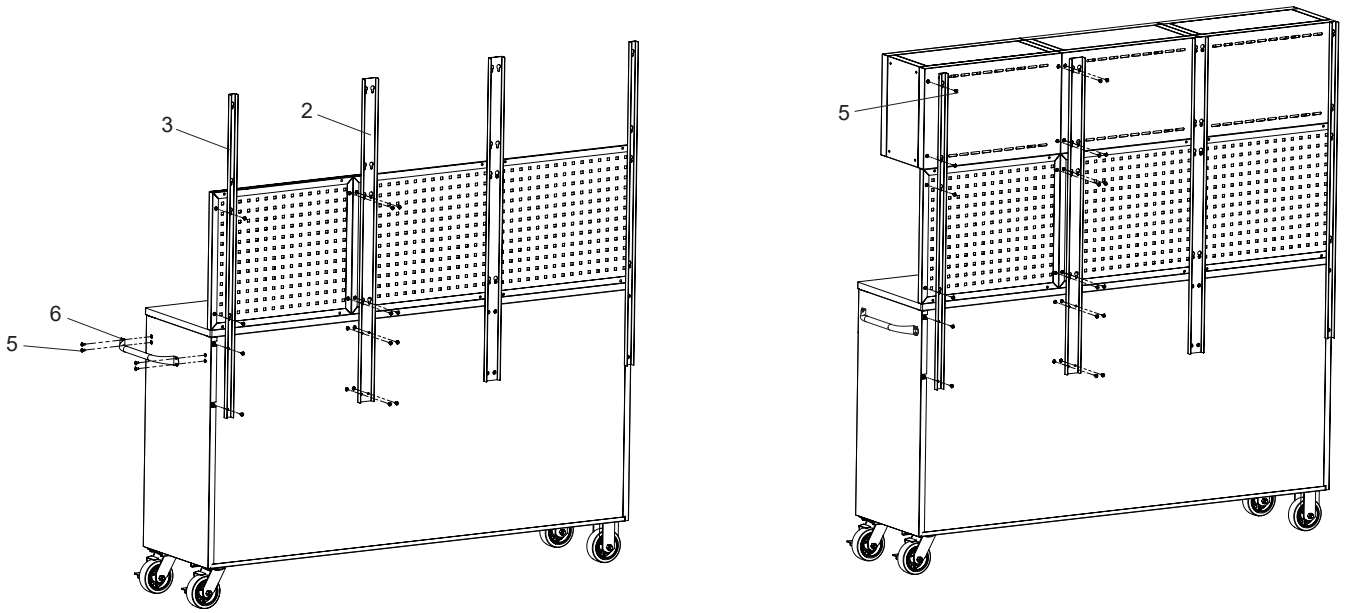

fig.3

5.4. Open the wall cabinet doors, align the wall cabinets, and connect them together. Assembly of the workstation is complete. Fig.4

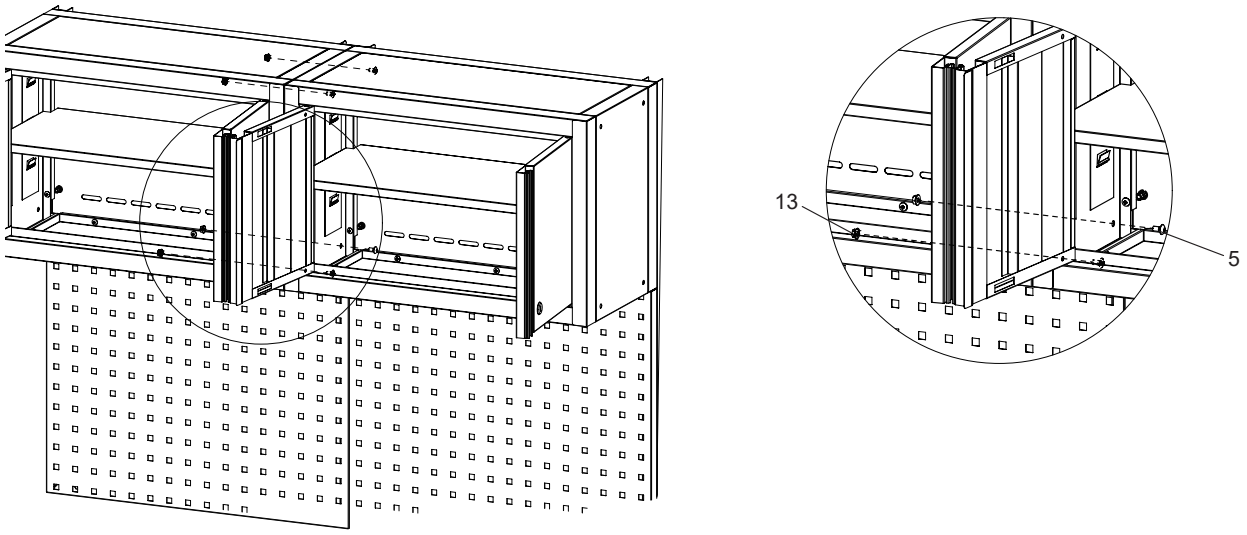

fig.4

6. MAINTENANCE

6.1. CASTOR MAINTENANCE (fig.5)
Lubricate the castors annually using high-quality bearing grease.

6.2. MAINTAINING THE DRAWERS
1. Periodically clean the drawer trim and interior using a mild detergent and water.
2. Remove grease and oil with a standard non-flammable cleaning fluid.
3. The use of drawer liners is recommended to protect the finish inside the drawers and make them easier to clean. Drawer liners can be cleaned with soap and water.
4. Lubricate the drawer slides semi-annually with grease or an equivalent lubricant. Fig.6

6.3. CARE AND CLEANING
Lubricate the castors annually using high-quality bearing grease to ensure smooth operation and long service life.
To help protect the powder-coated finish, do not allow harsh chemicals, such as oil, grease, or other solvents, to remain on the surface.
Clean and maintain all powder-coated surfaces using a glass cleaner.

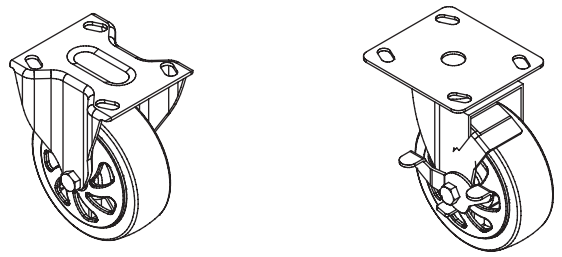

fig.5

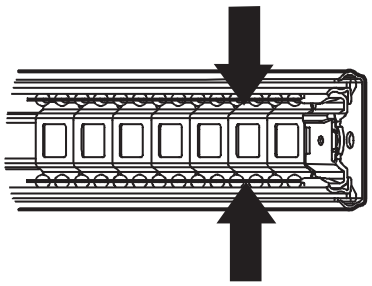

fig.6

7. END OF LIFE DISPOSAL

When this product reaches the end of its service life, dispose of it responsibly in accordance with local regulations. Where possible, separate metal, plastic, and other recyclable materials and recycle them through appropriate facilities. Dispose of any lubricants, grease, or other maintenance materials in accordance with local environmental requirements. Proper disposal helps conserve natural resources and protect the environment.

ENVIRONMENT PROTECTION
Recycle unwanted materials instead of disposing of them as waste. All tools, accessories and packaging should be sorted, taken to a recycling centre and disposed of in a manner which is compatible with the environment. When the product becomes completely unserviceable and requires disposal, drain any fluids (if applicable) into approved containers and dispose of the product and fluids according to local regulations.

Note: It is our policy to continually improve products and as such we reserve the right to alter data, specifications and component parts without prior notice.
Important: No Liability is accepted for incorrect use of this product.
Warranty: Guarantee is 60 months from purchase date, proof of which is required for any claim.

REGISTER YOUR PURCHASE HERE

Jack Sealey Ltd t/a Sealey Group, Kempson Way, Suffolk Business Park, Bury St Edmunds, Suffolk, IP32 7AR UK
Jack Sealey (EU) Ltd t/a Sealey Group, Farney Street, Carrickmacross, Co. Monaghan, A81 PK68 Ireland
Tel: 01284 757500 ▪ **Email:** sales@sealey.co.uk ▪ **Web:** www.sealey.co.uk

© Jack Sealey Limited