SUPERLINE PRO® MOBILE WORKSTATION WITH WASTE BIN & STORAGE BINS 9 DRAWER

MODEL NO: **APMWS3**

Thank you for purchasing a Sealey product. Manufactured to a high standard, this product will, if used according to these instructions, and properly maintained, give you years of trouble free performance.

IMPORTANT: PLEASE READ THESE INSTRUCTIONS CAREFULLY. NOTE THE SAFE OPERATIONAL REQUIREMENTS, WARNINGS & CAUTIONS. USE THE PRODUCT CORRECTLY AND WITH CARE FOR THE PURPOSE FOR WHICH IT IS INTENDED. FAILURE TO DO SO MAY CAUSE DAMAGE AND/OR PERSONAL INJURY AND WILL INVALIDATE THE WARRANTY. KEEP THESE INSTRUCTIONS SAFE FOR FUTURE USE.

Refer to instruction manual

Warning!
Heavy load

1. SAFETY

- ❑ **WARNING!** Ensure Health & Safety, local authority, and general workshop practice regulations are adhered to when using this workbench.
- ❑ **WARNING!** Use workbench on level and solid ground, preferably concrete. *Avoid tarmacadam since the workbench may sink into the surface.*
- ✓ Locate workbench in a suitable working area.
- ✓ Keep the work area clean, uncluttered and ensure there is adequate lighting.
- ✓ Keep the workbench clean and tidy in accordance with good workshop practice.
- ✓ Keep children and unauthorised persons away from the working area.
- × **DO NOT** use the workbench for any purpose other than that for which it is designed.
- × **DO NOT** undertake work on the workbench without the workpiece being adequately secured. Use clamps or a vice (not included) to secure the workpiece. Available from your Sealey stockist.
- × **DO NOT** use the workbench out of doors.
- × **DO NOT** get the workbench wet or use in damp or wet locations or areas where there is condensation.
- × **DO NOT** clean the workbench with any solvents which may damage the work surface or the painted surfaces.

NOTE! The assembly of this product will require assistance.

2. INTRODUCTION

Double skin side walls for added strength and durability. Nine drawers on mm ball bearing slides, plus an overhead cupboard with gas struts and pegboard back panel. Two separate drawers to accommodate a waste bin and storage bins. Ømm PP wheels, two fixed and two swivel with brakes. Cylinder locks, each supplied with two keys. 25mm thick rubberwood worktop. Supplied with accessories including parts bins, bin holders, tool racks, hooks, trays and a waste bin.

3. SPECIFICATION

Model	APMWS3
Overall Size with Handle (W x D x H)	1427 x 493 x 1965 mm
Overall Size without Handle (W x D x H)	1361 x 493 x 1965 mm
Full Length Drawer (x1)	1273 x 432 x 114mm
Large Deep Drawer (x2)	320 x 432 x 549 mm
Small 1/2 Drawer (x4)	593 x 432 x 75 mm
Medium 1/2 Drawer (x1)	593 x 432 x 154 mm
Top Cabinet (x1)	1360 x 281 x 350 mm
Net Weight	143kg

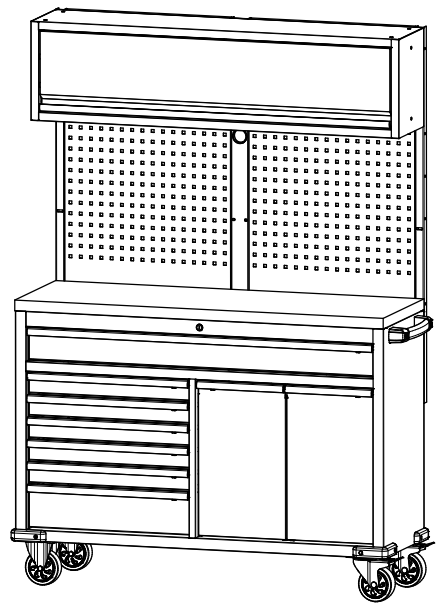

© Jack Sealey Limited

4. CONTENTS

NOTE: Ensure all components are present. If any components are missing, do not proceed with assembly and contact Sealey.

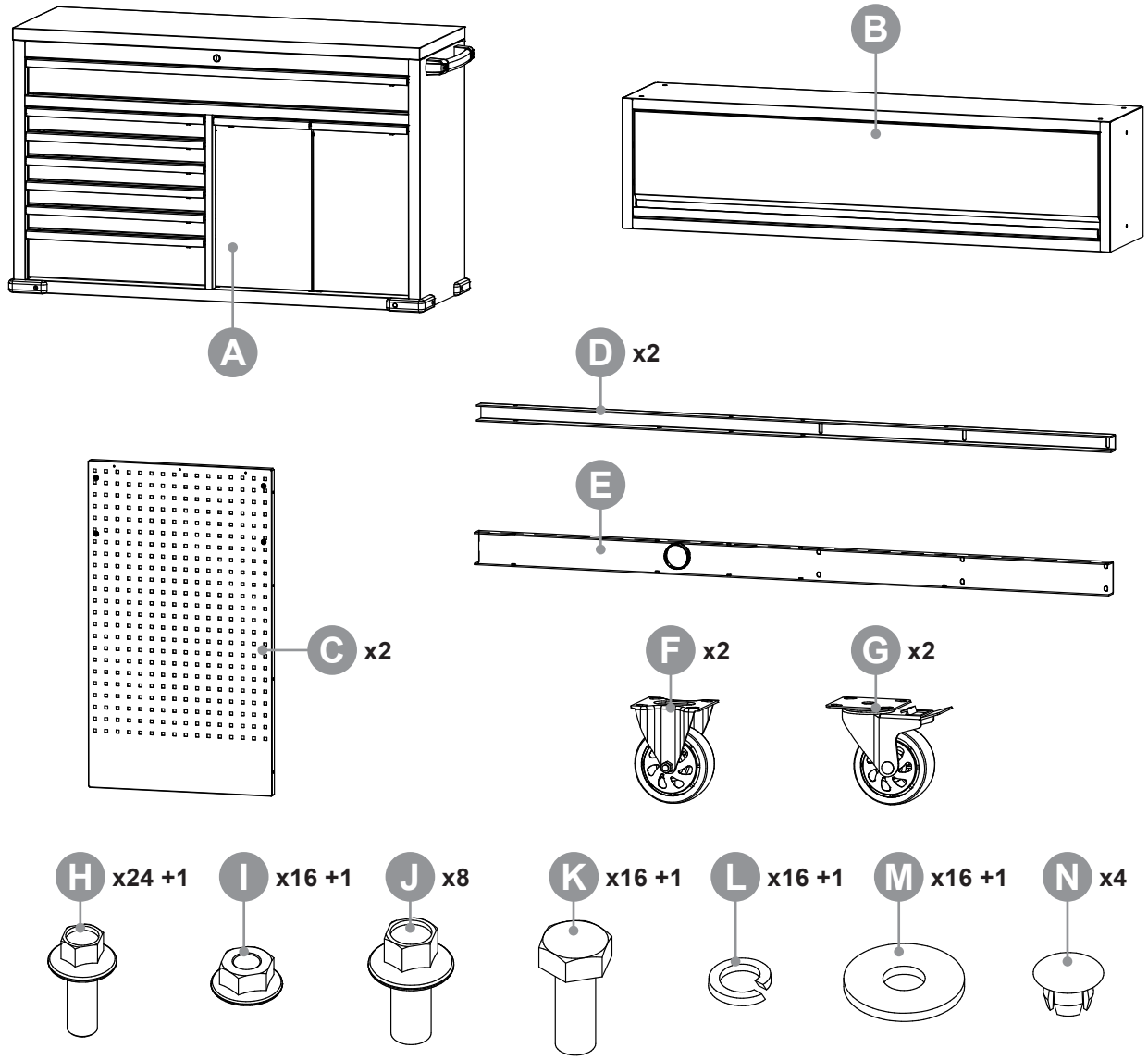

Part	Description	Qty
A	Cabinet	1
B	Wall Cabinet	1
C	Hanging Panel	2
D	Narrow Pillar	2
E	Central Pillar	1
F	Fixed Wheel	2
G	Caster with Brake	2
H	Bolt M6x16	24 +1
I	Nut M6	16 +1
J	Bolt M8x16	8
K	Bolt M8x20	16 +1
L	Spring Washer D8	16 +1
M	Washer D8 (OD 24)	16 +1
N	Plastic Cover	4

© Jack Sealey Limited

5. ASSEMBLY

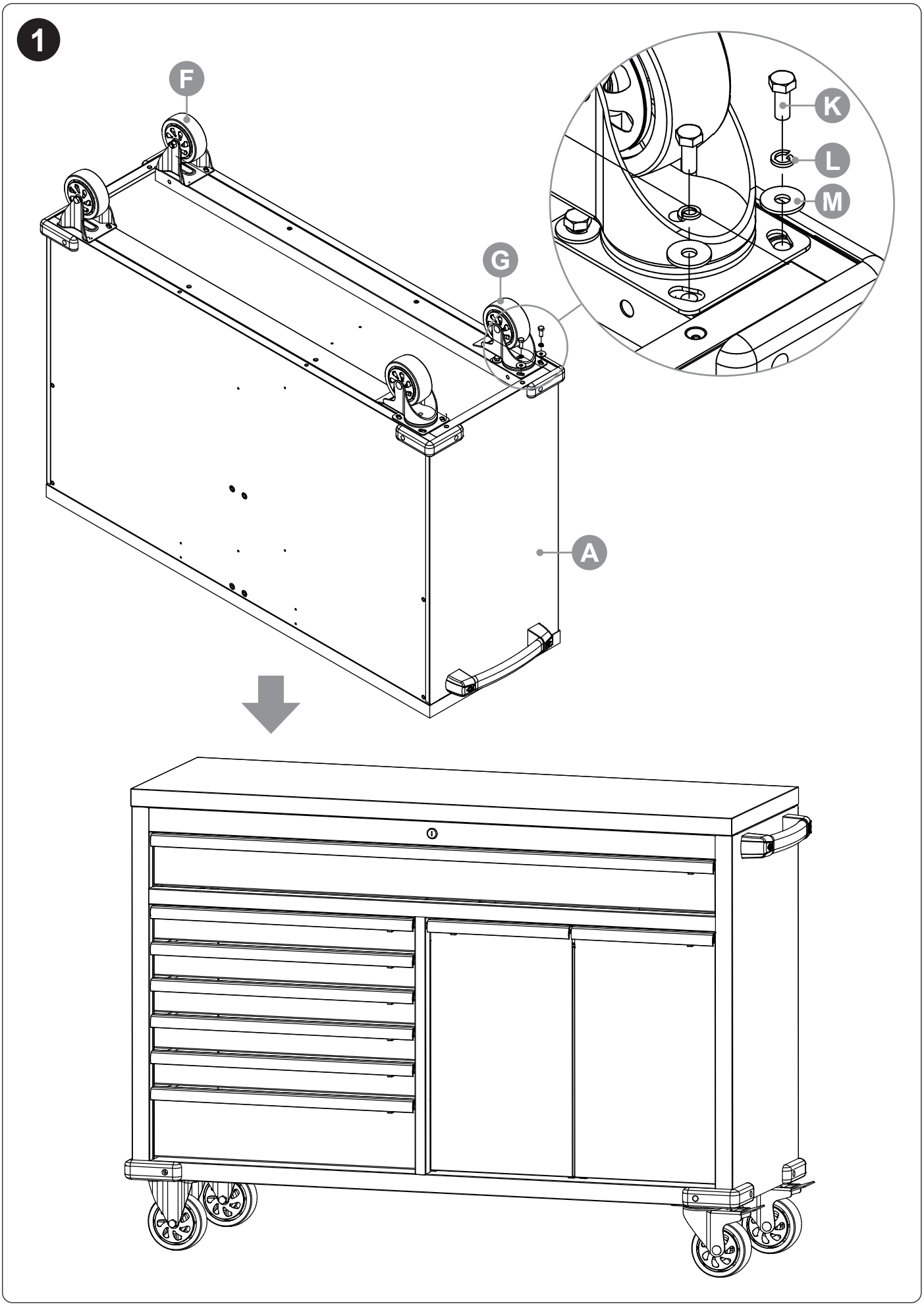

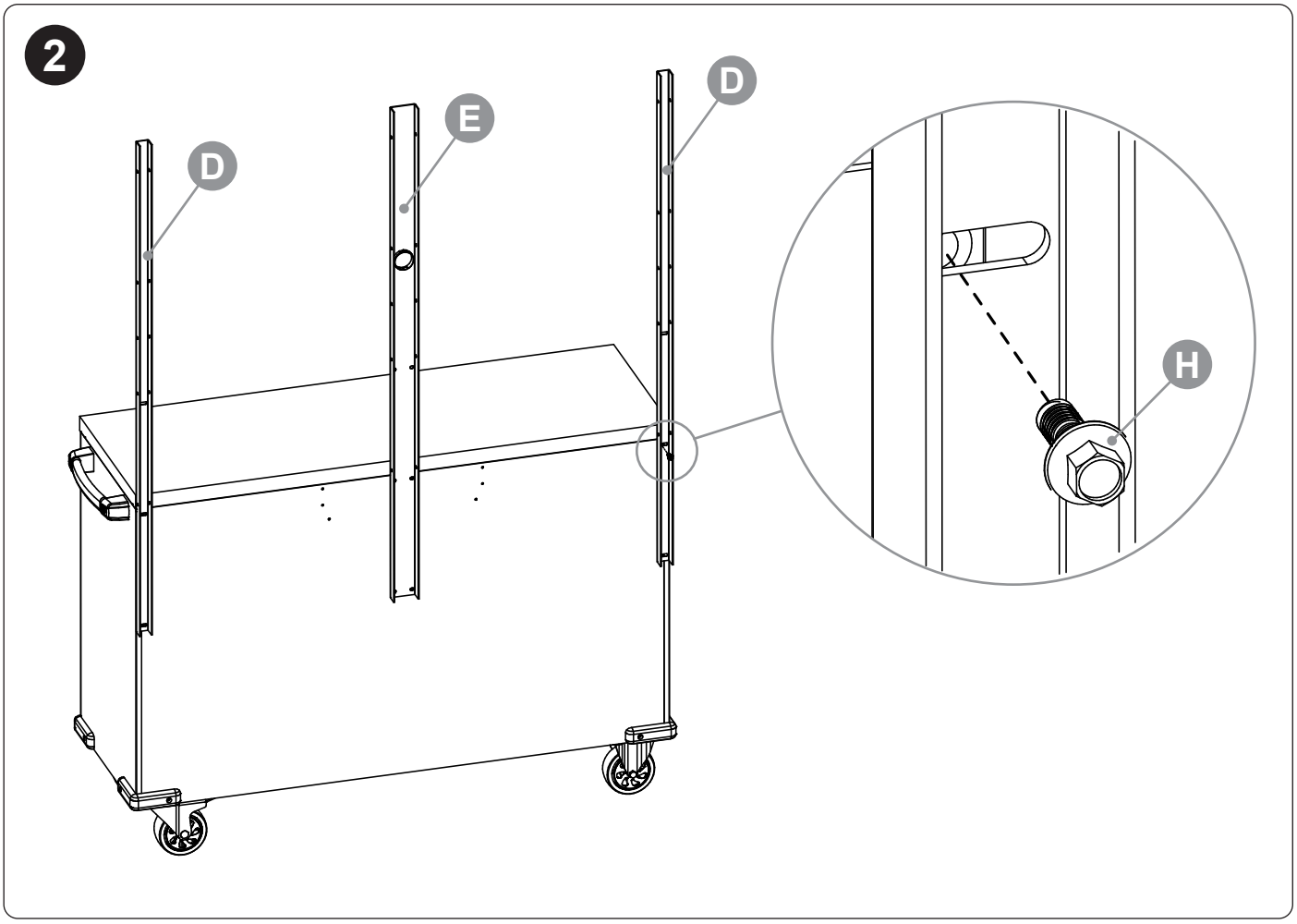

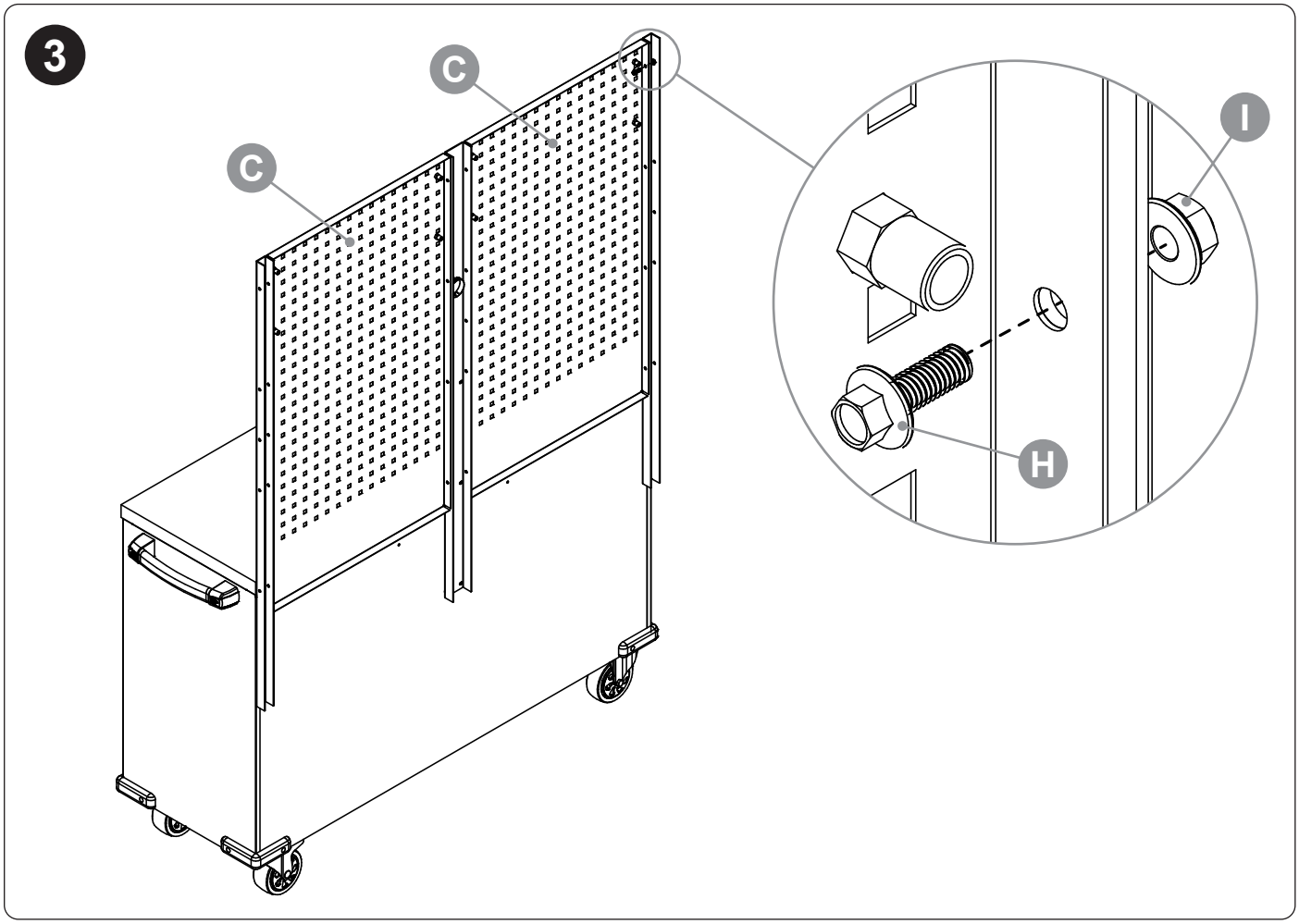

© Jack Sealey Limited

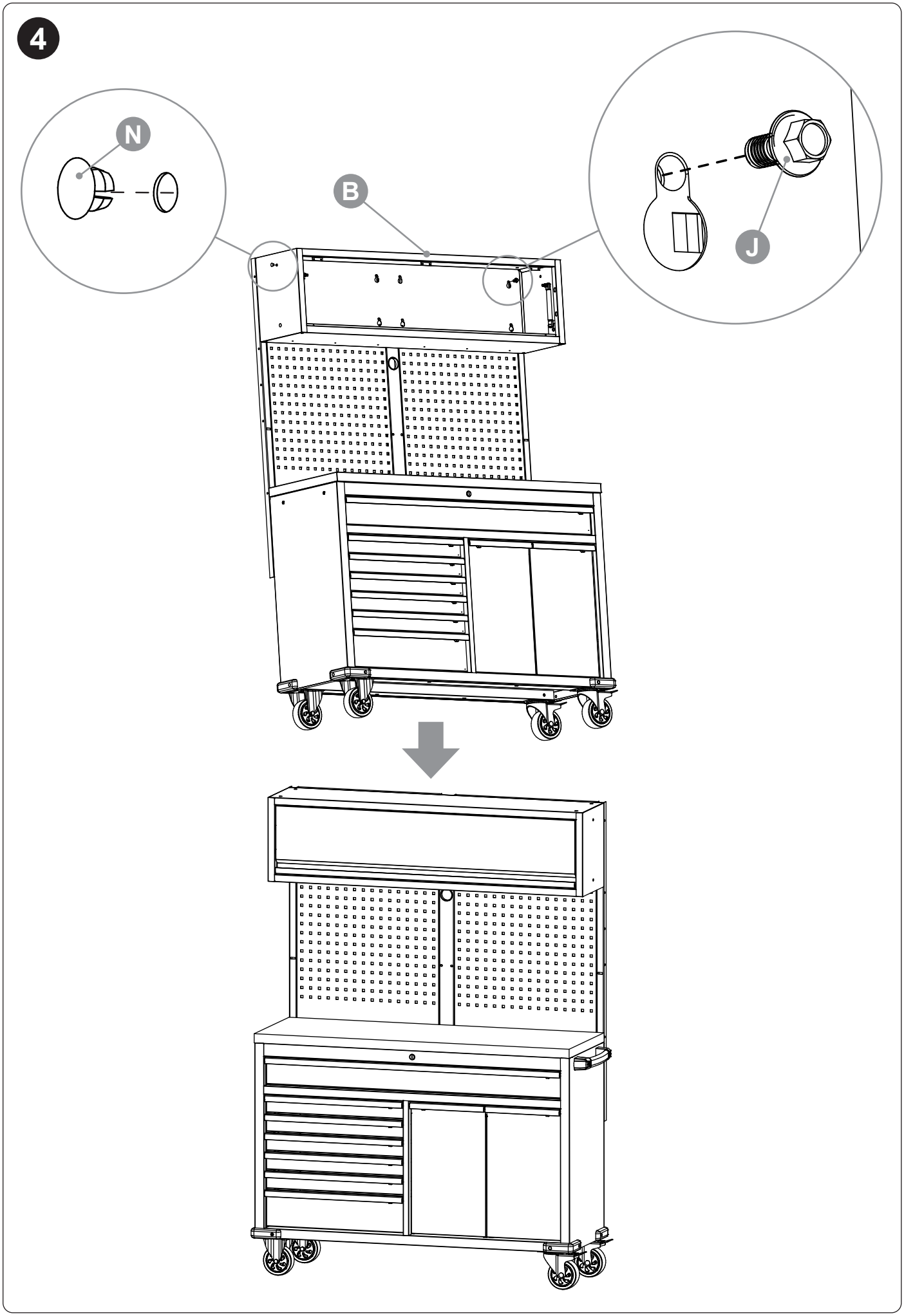

© Jack Sealey Limited

6. OPERATION

Drawer Locks: Each drawer, including the pull-out parts bin and bin storage, has an automatic locking mechanism when the drawer is closed.

To open a drawer, push the unlock lever to the left (fig.1.1) whilst pulling the drawer by the handle. This releases the sprung latch (fig.1.2).

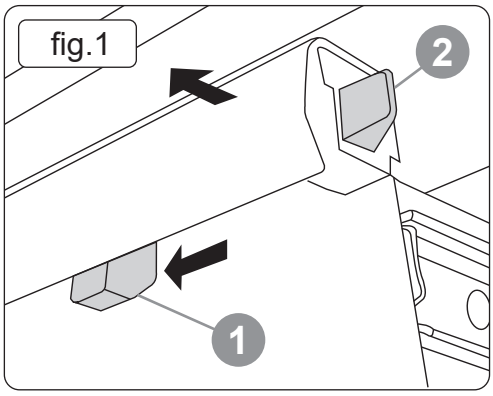

Drawer Removal: Fully empty the drawer and extend out all the way. Push up the release lever on the left side and push down the release lever on the right side (fig.2a/2b)

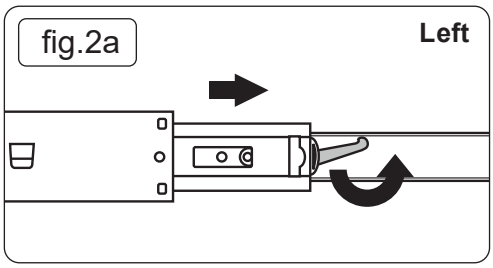

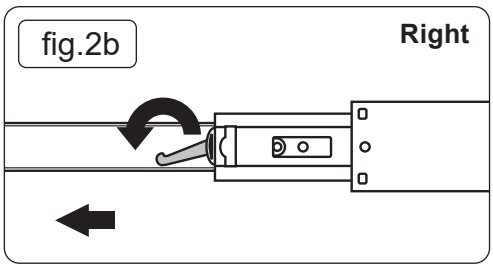

Refitting a drawer (fig.3): Pull out both drawer rails until fully extended. Align the slides on the drawer with the drawer rails. Slightly insert one side and repeat for the other side. Slowly push the drawer until it is fully closed in order to engage the drawer stops.

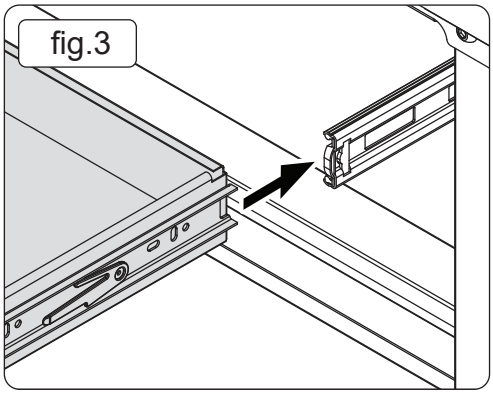

ENVIRONMENT PROTECTION
Recycle unwanted materials instead of disposing of them as waste. All tools, accessories and packaging should be sorted, taken to a recycling centre and disposed of in a manner which is compatible with the environment. When the product becomes completely unserviceable and requires disposal, drain any fluids (if applicable) into approved containers and dispose of the product and fluids according to local regulations.

REGISTER YOUR PURCHASE HERE

Note: It is our policy to continually improve products and as such we reserve the right to alter data, specifications and component parts without prior notice.
Important: No Liability is accepted for incorrect use of this product.
Warranty: 60 month guarantee. Proof of which is required for any claim.

Jack Sealey (EU) Ltd t/a Sealey Group Farney Street, Carrickmacross, Co. Monaghan, A81 PK68 Ireland
Jack Sealey Ltd t/a Sealey Group Kempson Way, Suffolk Business Park, Bury St Edmunds, Suffolk, IP32 7AR UK
Tel: 01284 757500 ▪ **Email:** sales@sealey.co.uk ▪ **Web:** www.sealey.co.uk

© Jack Sealey Limited